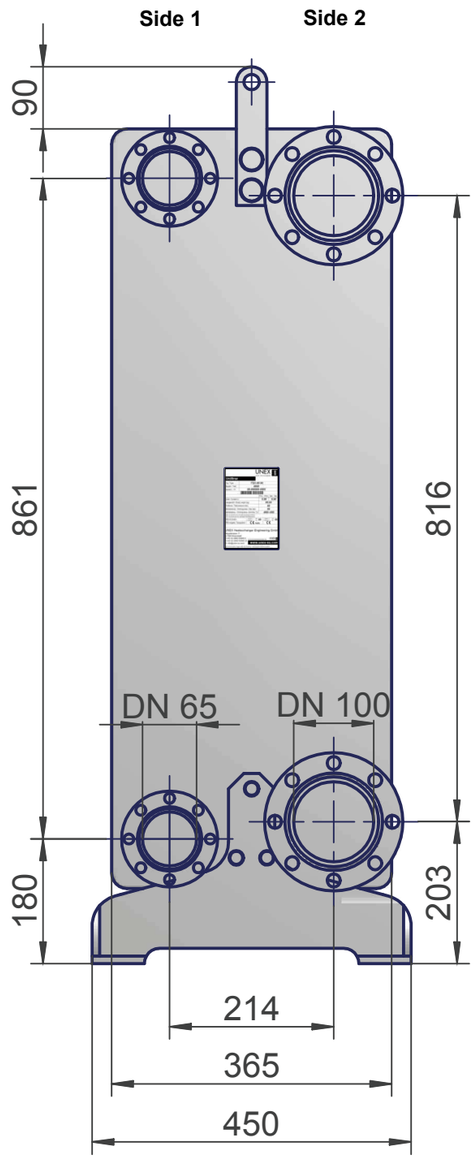

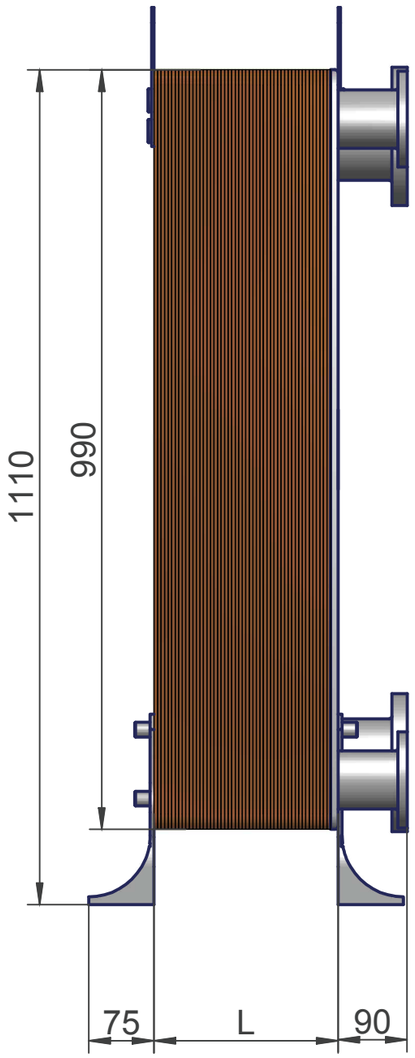

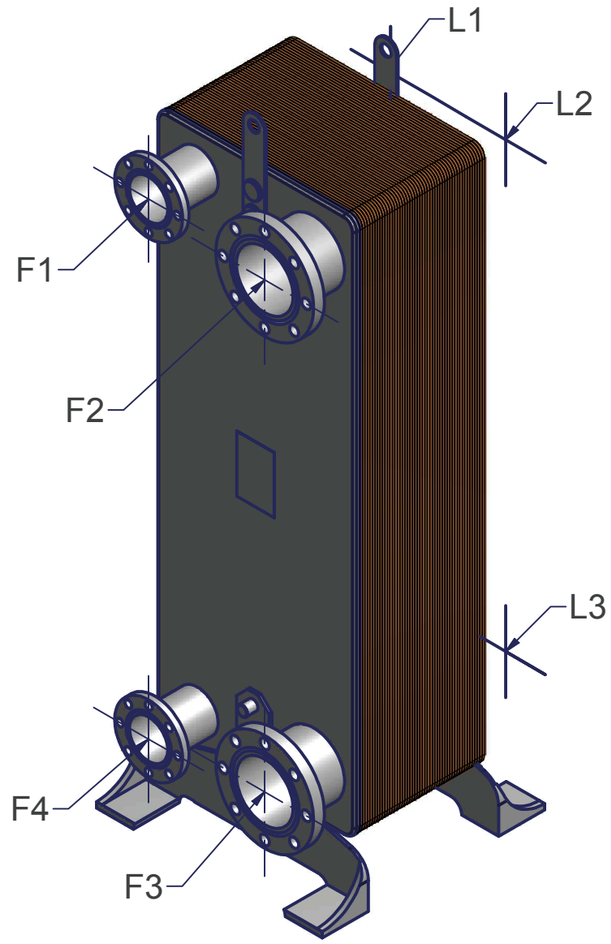

Exchanger connection options	
Standard	DN65Prim./DN100Sec.-90mm
Altanative	
Other	On request
Additional	On rear positions L1 to L4
Studs & Bolts	On request

Insulation options	Example picture
Self-adhesive rubberised Cooling applications -50 to +105°C	
Box panel Heating applications to +150°C (Peak)	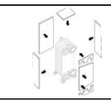

Amount of plates	50	60	70	80	90	100	110	120	140	160	180	200
Volume Side 1 (l)*	13.20	15.95	18.70	21.45	24.20	26.95	29.70	32.45	37.95	43.45	48.95	54.45
Volume Side 2 (l)*	17.50	21.00	24.50	28.00	31.50	35.00	38.50	42.00	49.00	56.00	63.00	70.00
Max working pressure (bar)	25 / 16											
Min / Max temperature (°C)	-10 / +180											
PED Class Group 2 (Category)	II									III		
Plate packet depth L(mm)*	145.0	172.0	199.0	226.0	253.0	280.0	307.0	334.0	388.0	442.0	496.0	550.0
Net Weight Empty (kg)	115.0	130.0	145.0	160.0	175.0	190.0	205.0	220.0	250.0	280.0	310.0	340.0
Heat Transfer Area (m²)	15.17	18.33	21.49	24.65	27.81	30.97	34.13	37.29	43.61	49.93	56.25	32.57

* Calculated values (final tolerance to ISO 2768-m)

Where appropriate the following European standards and regulations were used during design and construction:

97/23/EC (Pressure Equipment Directive)
EN 1148 (Water to water heat exchangers for district heating)
EN 10272 (Stainless steel bars used for pressure purposes)
EN 10028-7 (Stainless steel flat products used for pressure purposes)
EN 13445 (Unfired Pressure Vessels)
ISO 2768-m (General tolerances class "m")
ISO 228-1 ("G" Thread BSP parallel)
Please ask your sales partner if you require other standards or certification to be applied.

©2014 Errors, Omissions and Technical Alterations excepted

Size in mm

Material : 1.4301 (304) / 1.4404 (316L) / Cu 99.9%

UNEX HEAT EXCHANGERS
UNEX Heatexchanger Engineering GmbH
Hauptstrasse 17
A-7000
Eisenstadt
Austria
www.unex-eu.com
info@unex-eu.com
Tel: + 43 (0) 2682 635 85 0
Fax: + 43 (0) 2682 635 85 20

Scale
M 1:8 (A3)

Status	Change	Date	Name		Date	Name
				Drawn by	13.08.2014	MPI
				Checked by	09.10.2014	DRO

PB97LMH_STD_14_Rev00